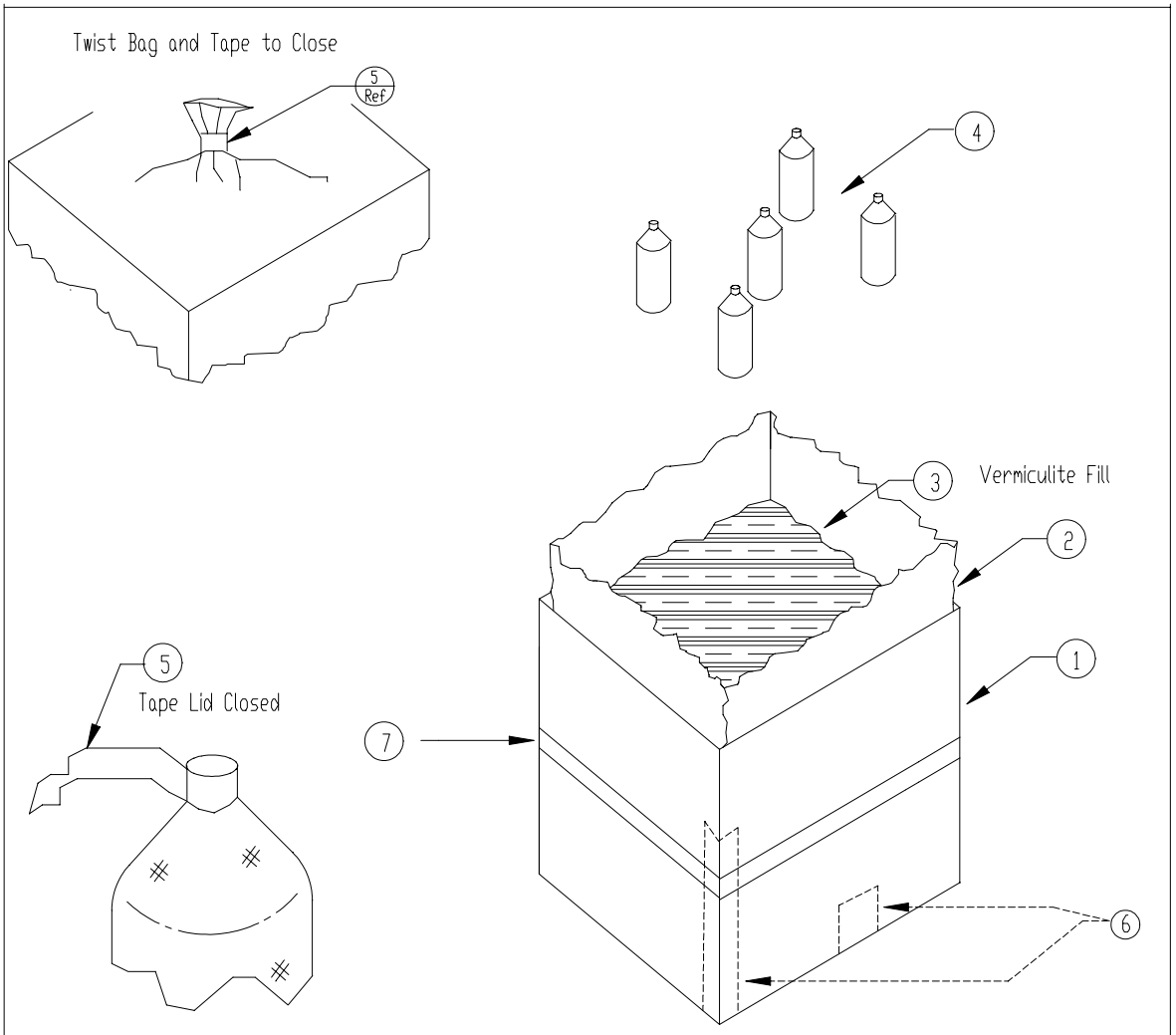

Item	Qty	Description	Notes
8			
7	A/R	Girthwise Band, Fiber Reinforced Tape	
6	A/R	Sealing Tape	
5	A/R	Fiber Reinforced Tape	
4	5	Inner Containers, 1-Quart	
3	A/R	Absorbent Fill	
2	1	Poly Bag	
1	1	Single Wall Corrugated Fiberboard Box	

	AFPTEF Air Force Packaging Technology and Engineering Facility	Note: Follow All Instructions in TR
File: DLAF01101.DWG		Dimensions in Inches
Dwg No: DLAF01101		Scale: NONE
Engineer: SJ Evans	DATE: 16 Apr 01	PAGE 1 OF 1