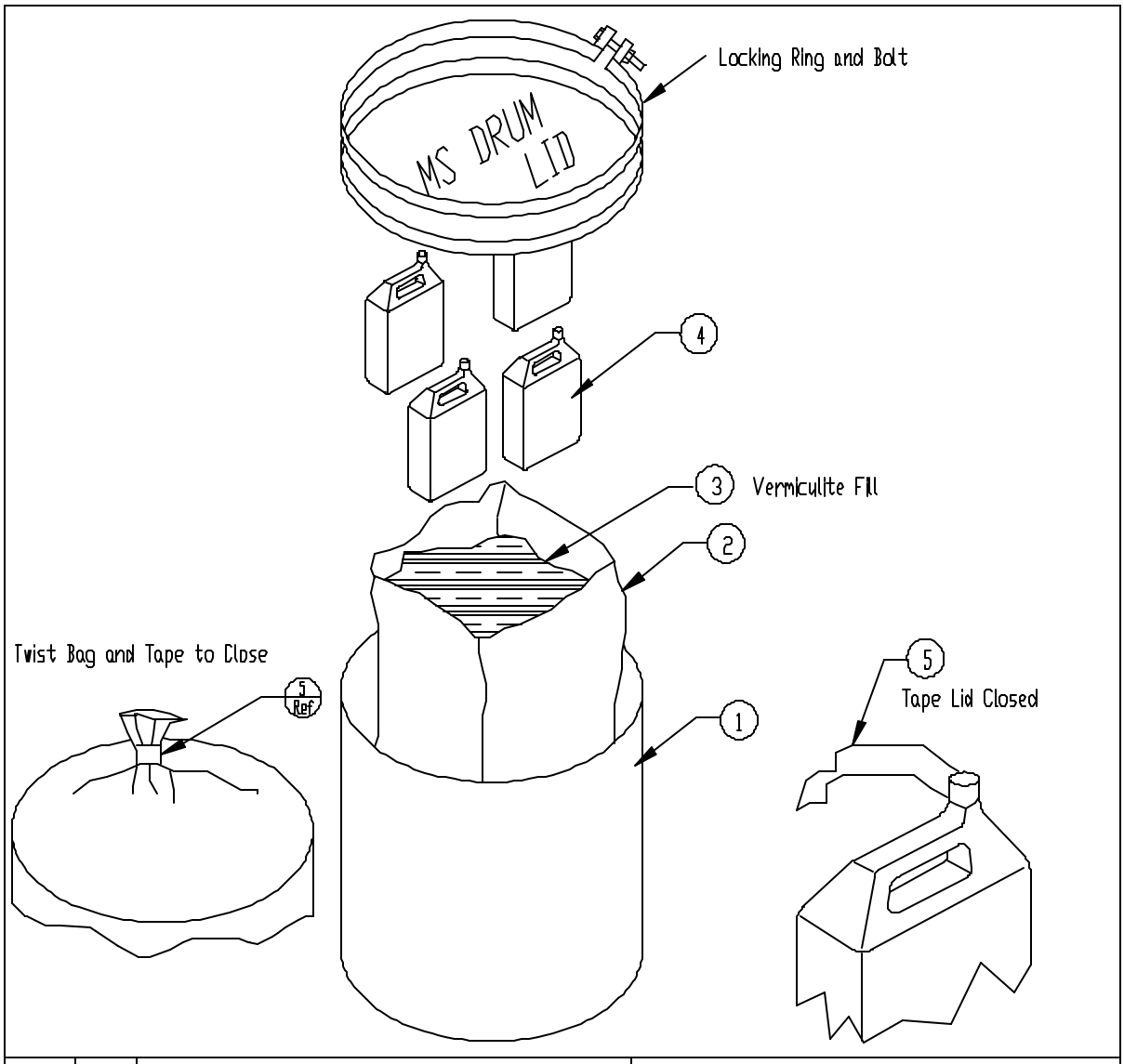

8			
7			
6			
5	A/R	Fiber Tape	
4	4	Inner Contafner, 1 Quart	
3	A/R	Verniculite	
2	1	Poly Bag	
1	1	Steel Open Head Drum	
Item	Qty	Description	Notes

File: TR00013D.DWG	AFPTEF Air Force Packaging Technology and Engineering Facility	Note: Follow All Instructions in TR
Dwg No: TR00013D		Dimensions in Inches
Engineer: S J Evans	DATE: 17 July 00	Scale: NONE
		PAGE 1 OF 1