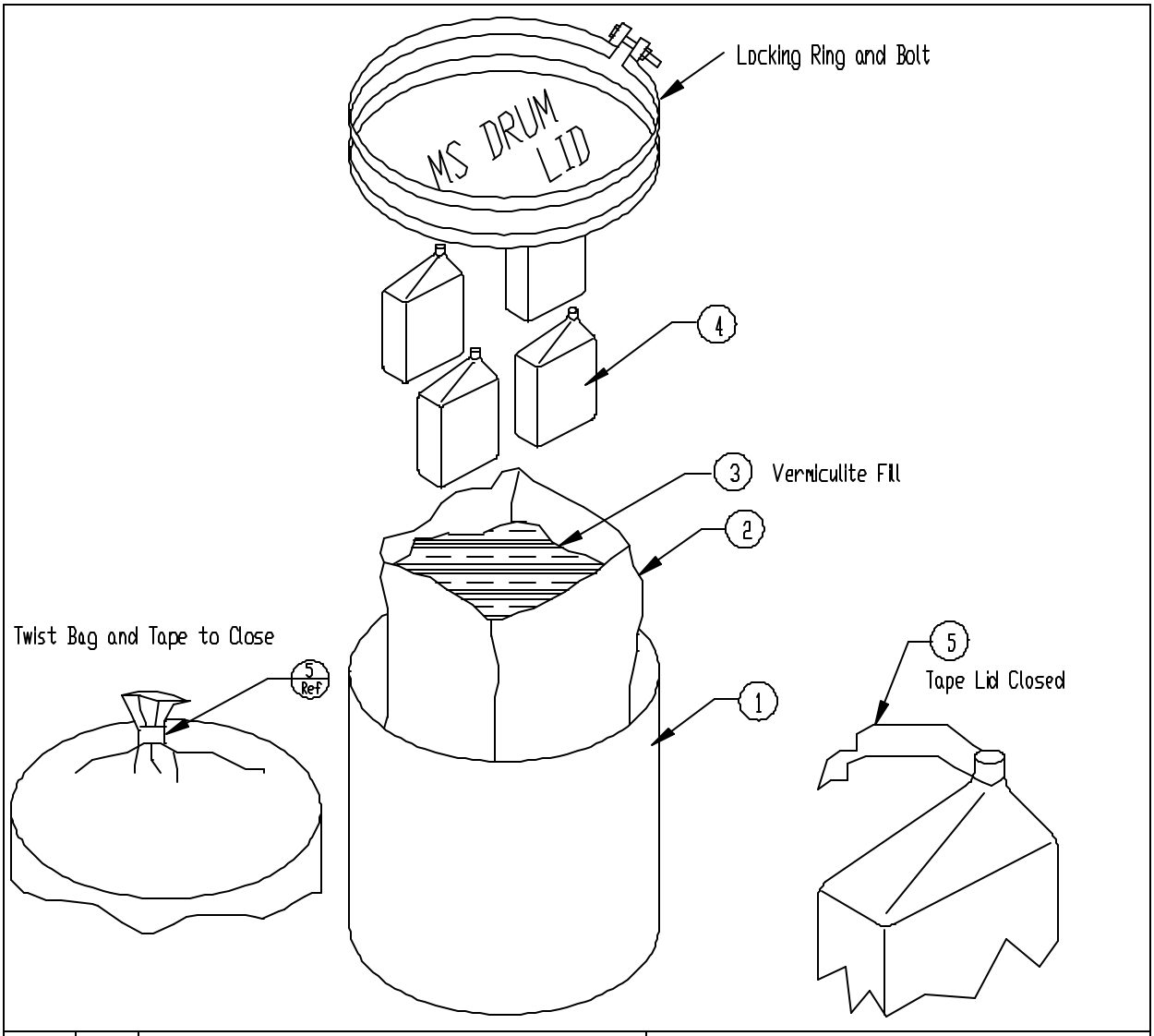

8			
7			
6			
5	A/R	Fiber Tape	
4	4	Inner Container, 1 Quart	
3	A/R	Vermiculite	
2	1	Poly Bag	
1	1	Steel Open Head Drum	
Item	Qty	Description	Notes

	AFPTEF Air Force Packaging Technology and Engineering Facility	Note: Fallow All Instructions in TR
File: TR00012D.DWG		Dimensions in Inches
Dwg No: TR00012D		Scale: NONE
Engineer: S J Evans	DATE: 19 July 00	PAGE 1 OF 1