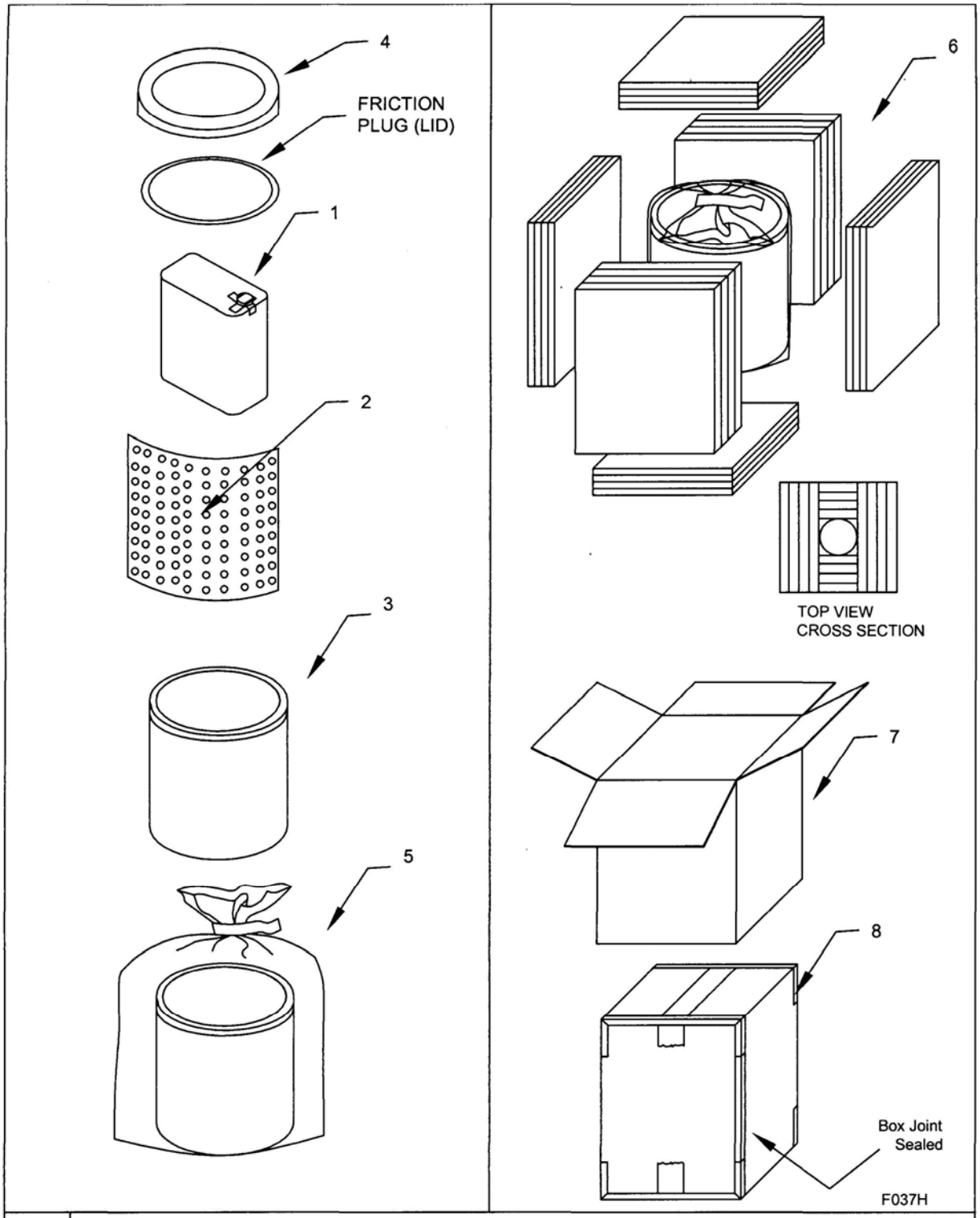

ITEM	DESCRIPTION
1	1-QUART, RECTANGULAR, METAL CAN, (OBLONG) WITHOUT HANDLE, FREUND NO. 1912, QTY. 1 1" WIDE FILAMENT REINFORCED TAPE, MEDIUM TENSILE
2	BUBBLE WRAP, FLAT SIDE TO BOTTLE, AS NEEDED TO PREVENT MOVEMENT
3	FRICTION PLUG (LID), 5.6 QUART ROUND METAL CAN, QTY. 1
4	HAZMATPAC RING LOCK (SECONDARY CLOSURE)
5	4 MIL POLY BAG, MINIMUM 23 INCHES WIDE BY 27 INCHES HIGH, CLOSURE IAW MIL-D-6054F
6	FIBERBOARD PADS, SW, 200 BURST STRENGTH, 4 SIDES, TOP & BOTTOM (4 PADS EACH) POSITION IN FIBERBOARD BOX AS SHOWN
7	FIBERBOARD BOX, ASTM D-5118, STYLE RSC, 8" x 8" x 12" H, (GRADE V3C) NSN 8115-00-281-3882
	2" WIDTH A-A-1830 CLEAR TAPE, NSN 7510-00-266-6715

Encl (2)