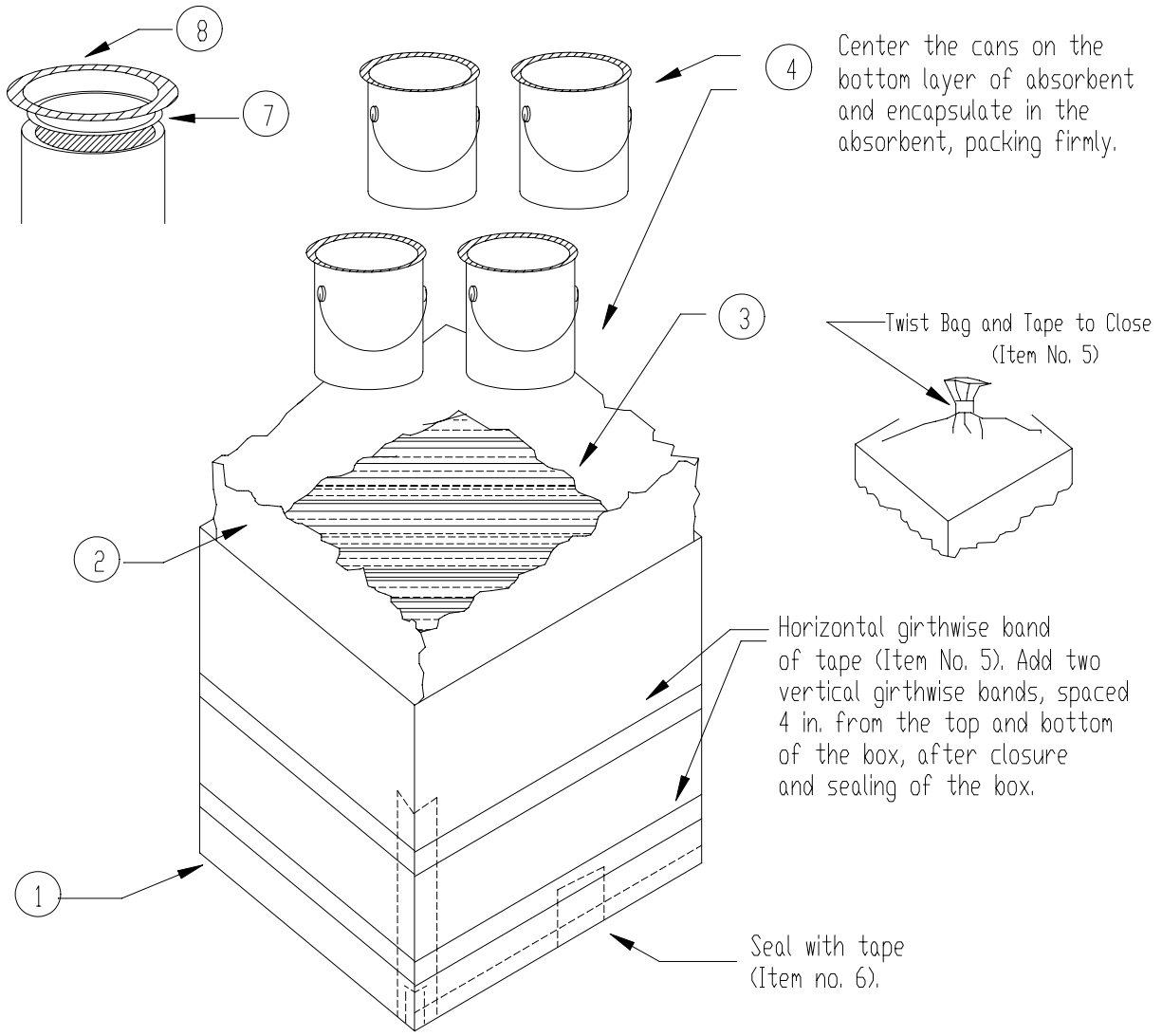

Item	Qty	Description	Notes
8	A/R	Ring Lock	Hazmatpac Stock No. C-700
7	A/R	Can Lid	
6	A/R	Sealing Tape	NSN 7510-00-266-6715
5	A/R	Fiber Reinforced Tape	NSN 7510-00-582-4772
4	4	Metal Paint Can	Freund Stock No. 1837
3	A/R	Absorbent Fill	Vermiculite only
2	1	4-mil LDPE Bag	Min. Dim. 22 in. x 22 in. x 47 in.
1	1	Single Wall Corrugated Fiberboard Box	NSN 8115-00-190-5002, 16 in. x 16 in. x 16 in.

	AFPTEF Air Force Packaging Technology and Engineering Facility	Note: Follow All Instructions in TR
File: DLAF058-04.DWG		Dimensions in Inches
Dwg No: DLAF05804		Scale: NONE
Engineer: SJ Evans	DATE: 30 April 04	PAGE 1 OF 1