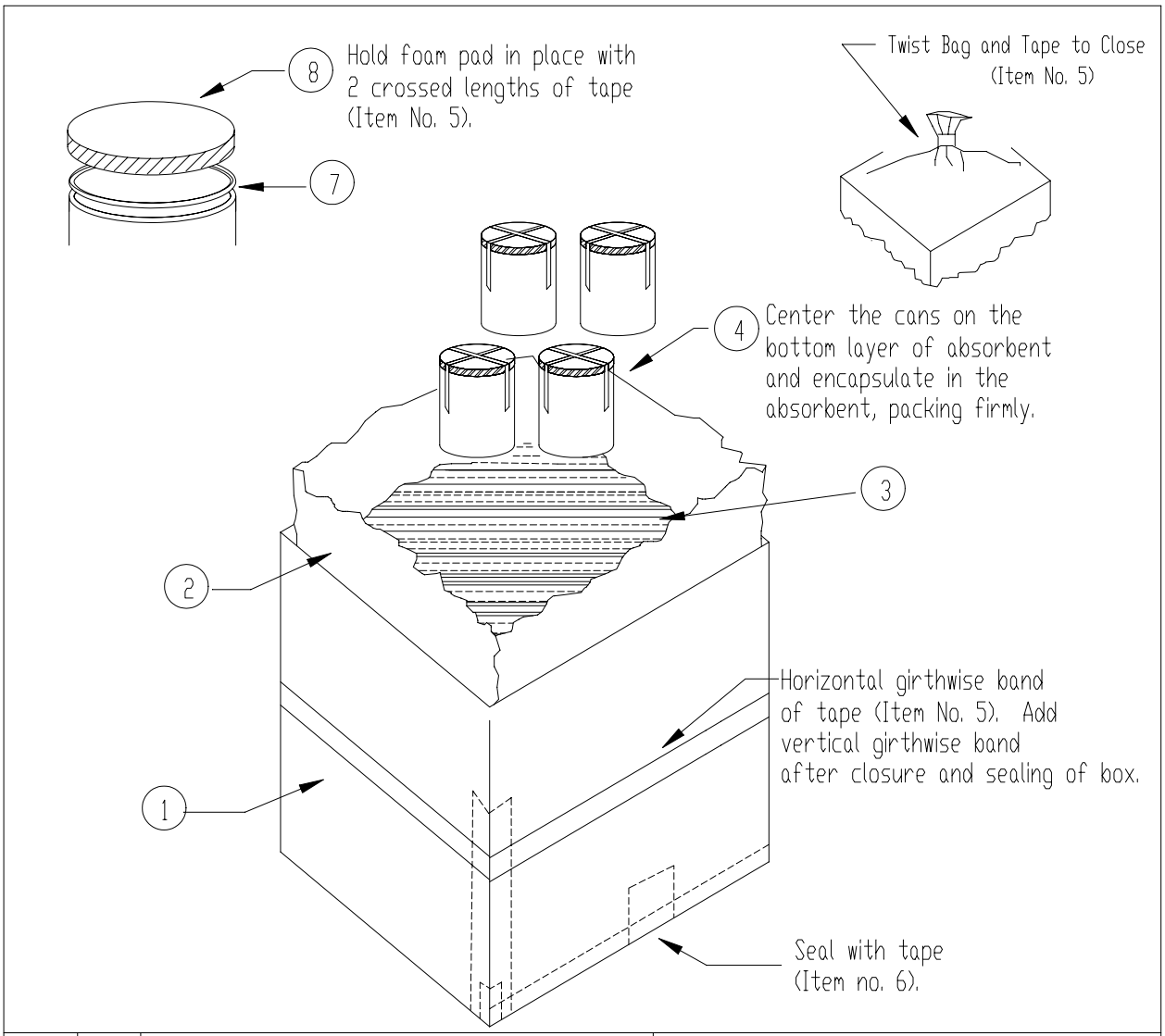

Item	Qty	Description	Notes
8	A/R	Ring Lock	1-in. thick 2-lb polyethylene foam
7	A/R	Can Lid	
6	A/R	Sealing Tape	NSN 7510-00-266-6715
5	A/R	Fiber Reinforced Tape	NSN 7510-00-582-4772
4	4	Metal Paint Can	Freund Stock No. 1818A
3	A/R	Absorbent Fill	Vermiculite, Absorbent GP, Hazmatpac A900
2	1	4-mil LDPE Bag	Min. Dim. 28 in. x 32 in.
1	1	Single Wall Corrugated Fiberboard Box	NSN 8115-00-183-9491, 12 in. x 12 in. x 12 in.

	AFPTEF Air Force Packaging Technology and Engineering Facility	Note: Follow All Instructions in TR
File: DLAF045-04.DWG		Dimensions in Inches
Dwg No: DLAF04504		Scale: NONE
Engineer: SJ Evans	DATE: 30 April 04	PAGE 1 OF 1