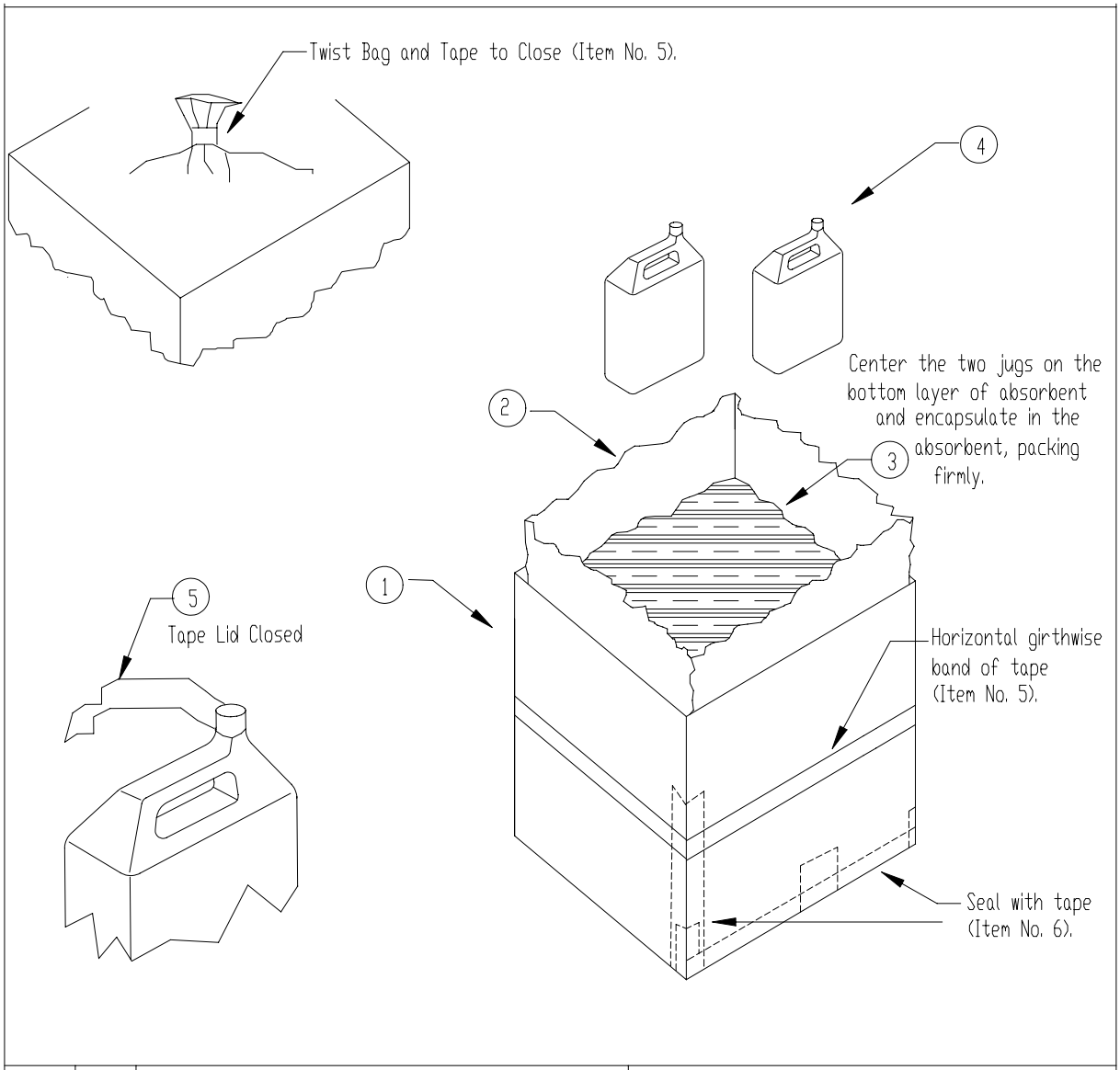

Item	Qty	Description	Notes
6	A/R	Sealing Tape	7510-00-266-6715
5	A/R	Fiber Reinforced Tape	7510-00-582-4772
4	2	Inner Containers, 2.5-Gal Rect. Plastic w/ Handle	Freund stock number 31325F, fluorinated, white, HDPE.
3	A/R	Absorbent Fill	Vermiculite or Absorbent A900 or Absorbent GP
2	1	4-mil LDPE Bag	Min. Dim. 22 in. x 22 in. x 47 in., gussetted.
1	1	Single Wall Corrugated Fiberboard Box	8115-00-428-4185

	AFPTEF Air Force Packaging Technology and Engineering Facility	Note: Follow All Instructions in TR
File: DLAF061-02.DWG		Dimensions in Inches
Dwg No: DLAF06102D		Scale: NONE
Engineer: SJ Evans	DATE: 19 September 02	PAGE 1 OF 1